Engineering Drawing and Graphics (CE1P001)

Dr. T. Jothi Saravanan

Indian Institute of Technology Bhubaneswar

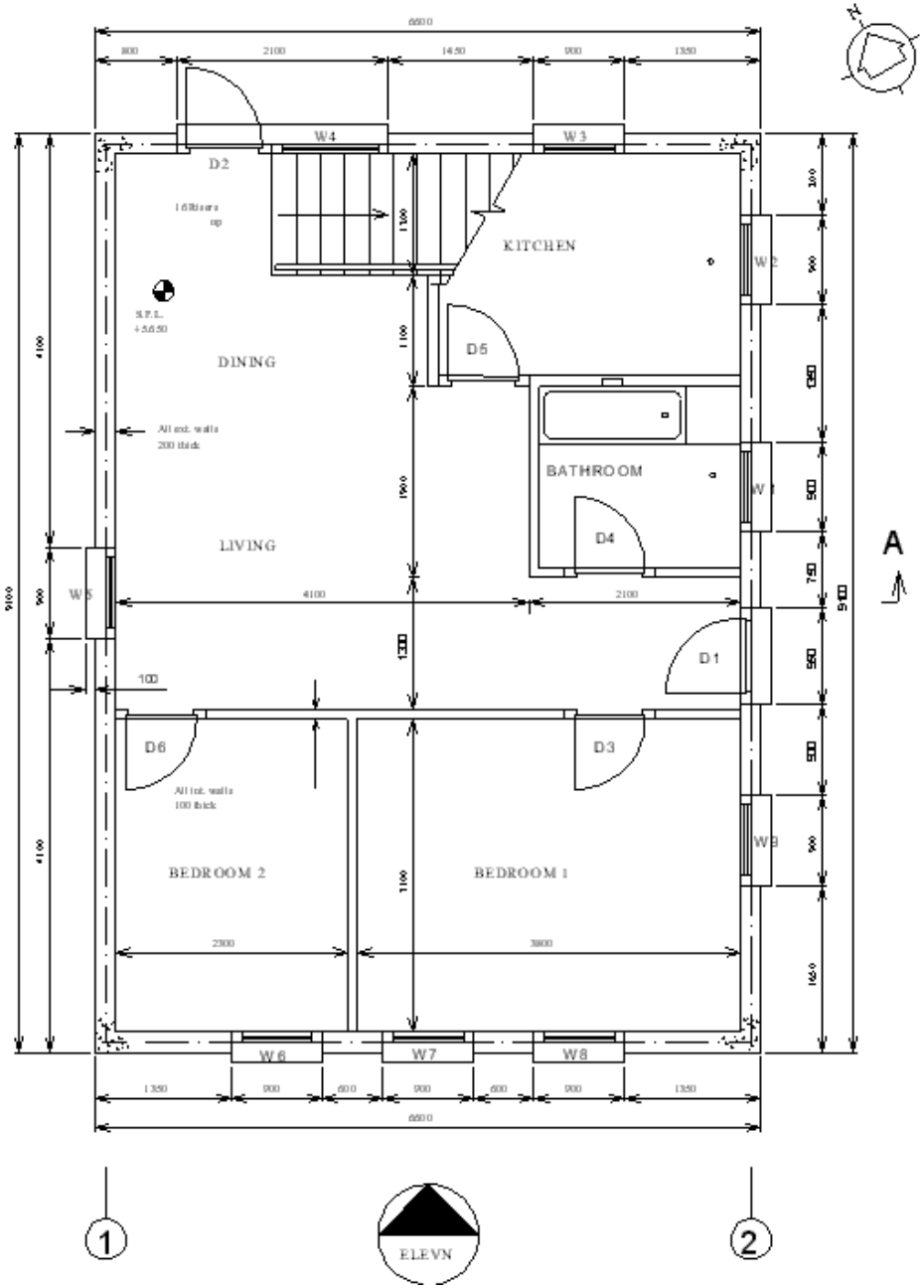
KITCHEN
DINING
LIVING
BATHROOM
BEDROOM 2
BEDROOM 1
D1
D2
D3
D4
D5
D6
W1
W2
W3
W4
W5
W6
W7
W8
W9
All ext. walls 200 thick
All int. walls 100 thick
A
1
2
ELEVN

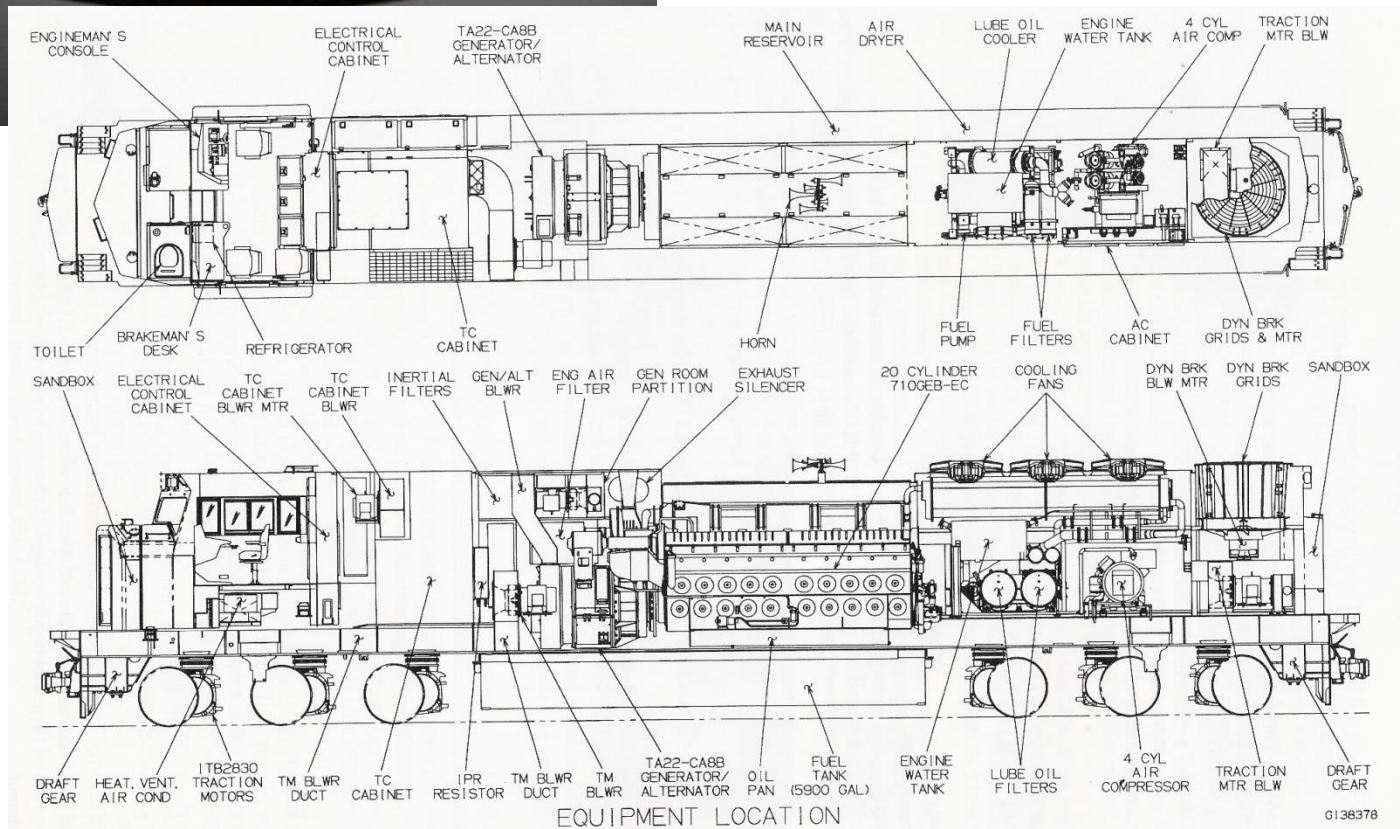
ENGINEMAN'S CONSOLE
ELECTRICAL CONTROL CABINET
TA22-CA8B GENERATOR/ ALTERNATOR
MAIN RESERVOIR
AIR DRYER
LUBE OIL COOLER
ENGINE WATER TANK
4 CYL AIR COMP
TRACTION MTR BLW
TOILET
BRAKEMAN'S DESK
REFRIGERATOR
TC CABINET
HORN
FUEL PUMP
FUEL FILTERS
AC CABINET
DYN BRK GRIDS & MTR
SANDBOX
ELECTRICAL CONTROL CABINET
TC CABINET BLWR MTR
TC CABINET BLWR
INERTIAL FILTERS
GEN/ALT BLWR
ENG AIR FILTER
GEN ROOM PARTITION
EXHAUST SILENCER
20 CYLINDER 710GEB-EC
COOLING FANS
DYN BRK BLW MTR
DYN BRK GRIDS
SANDBOX
DRAFT GEAR
HEAT. VENT. AIR COND
ITB2830 TRACTION MOTORS
TM BLWR DUCT
TC CABINET
IPR RESISTOR
TM BLWR DUCT
TM BLWR
TA22-CA8B GENERATOR/ ALTERNATOR
OIL PAN
FUEL TANK (5900 GAL)
ENGINE WATER TANK
LUBE OIL FILTERS
4 CYL AIR COMPRESSOR
TRACTION MTR BLW
DRAFT GEAR
EQUIPMENT LOCATION
G138378

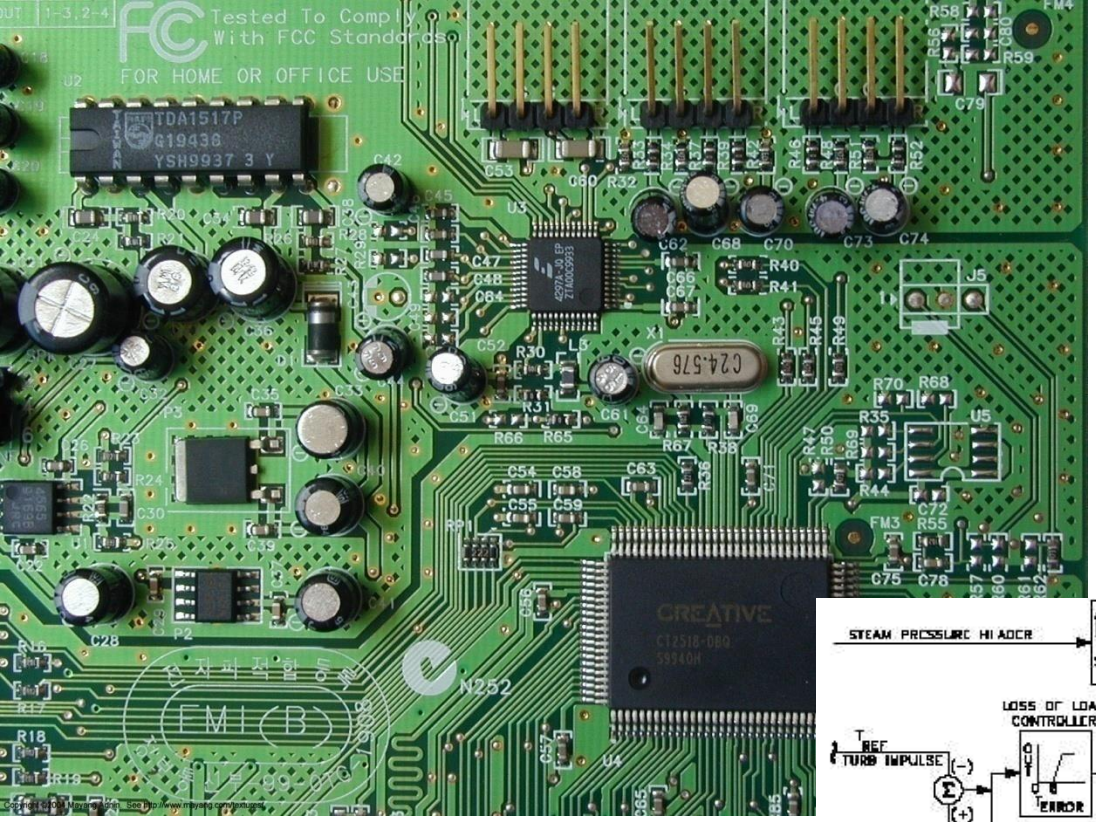
Tested To Comply
With FCC Standards
FOR HOME OR OFFICE USE
TDA1517P
CREATIVE
N252

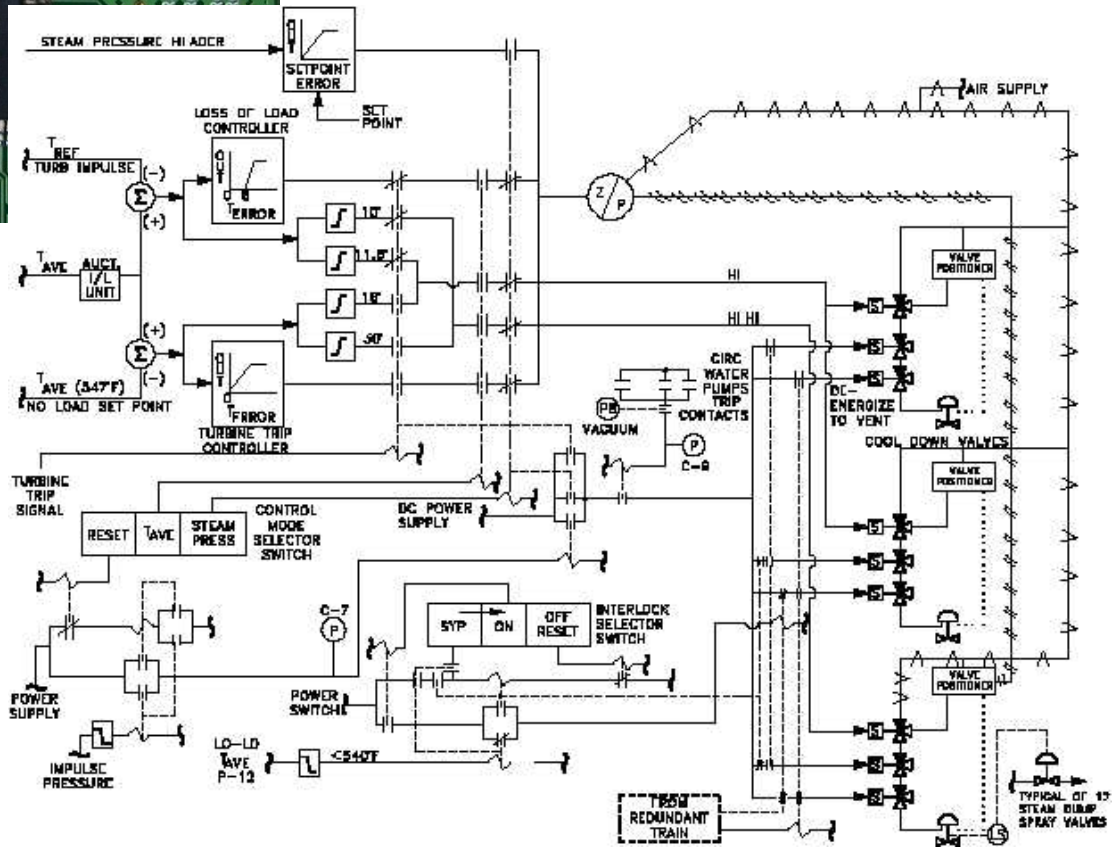
STEAM PRESSURE HI ADCR
SETPOINT ERROR
SET POINT
LOSS OF LOAD CONTROLLER
T REF TURB IMPULSE
ERROR
T AVE
AUCT T/L UNIT
T AVE (547°F) NO LOAD SET POINT
TURBINE TRIP CONTROLLER
AIR SUPPLY
HI
HI HI
VALVE POSITIONER
CIRC WATER PUMPS TRIP CONTACTS
DC-ENERGIZE TO VENT
COOL DOWN VALVES
VACUUM
C-8
TURBINE TRIP SIGNAL
RESET
TAVE
STEAM PRESS
CONTROL MODE SELECTOR SWITCH
DC POWER SUPPLY
C-7
SYP
ON
OFF RESET
INTERLOCK SELECTOR SWITCH
POWER SUPPLY
POWER SWITCH
IMPULSE PRESSURE
LO-LO TAVE P-12
<540°F
REDUNDANT TRAIN
TYPICAL OF 13 STEAM DUMP SPRAY VALVES

Course Plan:

- Lines, lettering, dimensioning (**Sheet 0**)
- Scales (**Sheet 1**)
- Projection of lines : traces, true length (**Sheet 2 and 3**)
- Projection of planes and solids; solid objects : cube, prism, pyramid, cylinder, cone and sphere (**Sheet 4 and 5**)
- Section of solids : true shape of section (**Sheet 6**)
- Development of surfaces (**Sheet 7**)
- Isometric projection, isometric scale (**Sheet 8**)
- Introduction to CAD tools : basics; introduction of development and intersection of surfaces (**Auto CAD Drawing**)
- Mini-Project using Auto CAD

Text/Reference Books

Text Book

- N. D. Bhatt and V. M. Panchal, Engineering drawing – Plane and Solid geometry, Charotar Publishing House, Anand.
- D. A. Jolhe, Engineering drawing, Tata McGraw Hill, New Delhi.

References Book

- P.S. Gill, Engineering Drawing, S K Kataria & Sons.
- C. Jensen, J D Helsel and D R Short, Engineering drawing and design, McGraw Hill, New Delhi.
- K. Venugpoal, Engineering Drawing and Graphics, New Age International, New Delhi.

Evaluation

- **Class work: 40 marks**
  - ❖Includes sheets and attendance
- **Mini-Project: 20 marks**
  - ❖Includes Auto-CAD drawing
- **End-sem exam: 40 marks**
  - ❖Includes sheet exam and Viva

Drawing accessories

- Drawing Board
- Drawing Sheet
- Mini drafter
- Drawing Clips (4 No.s)
- Drawing pins
- Scale
- Pencil (2B, HB and 2H)
- Set squares
- Compass
- Dividers
- Eraser
- Sharpener
- Duster (hand kerchief)

- Drawing Board

- Drawing Papers

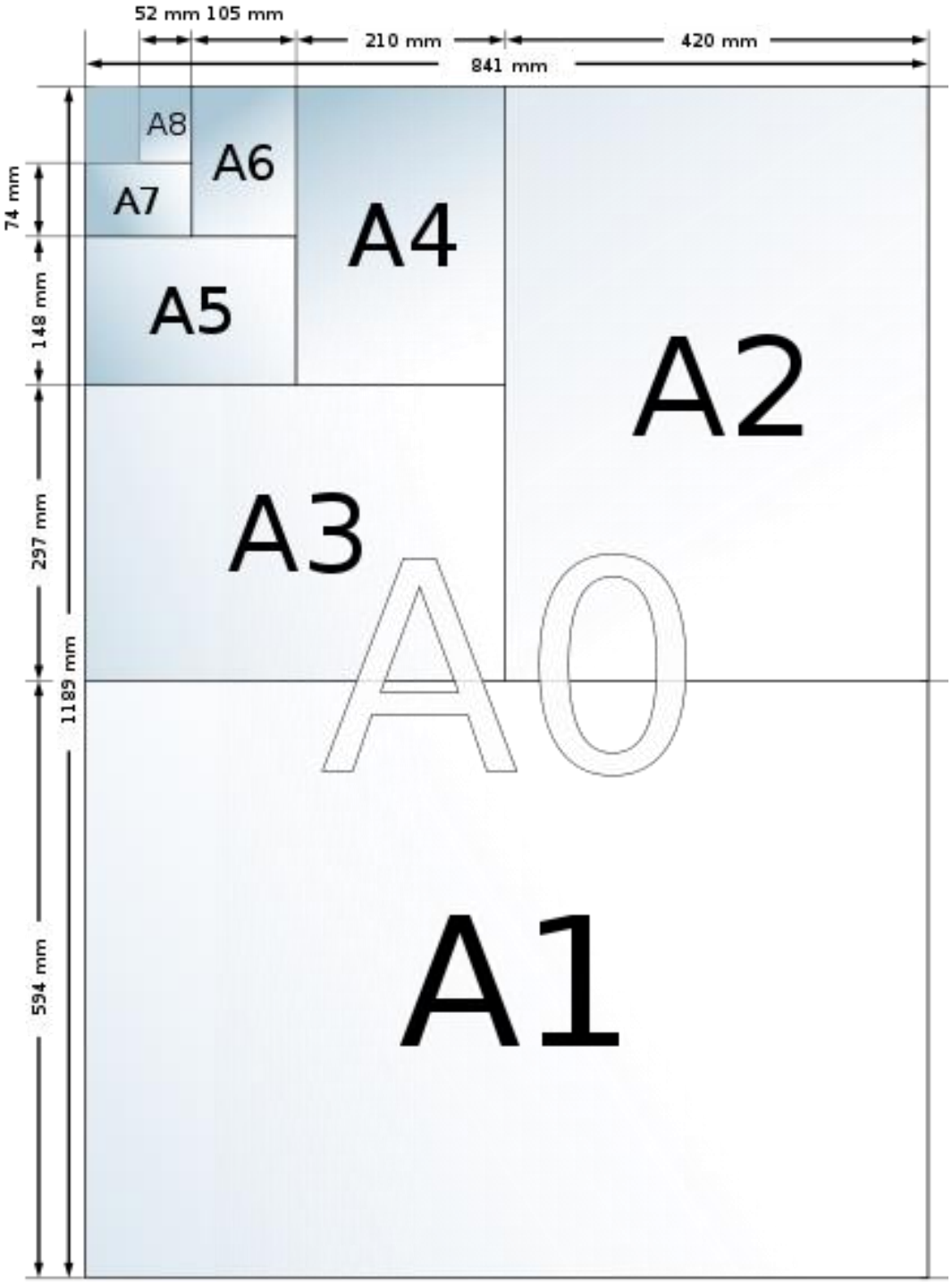

As per IS 10711: 2001

Drawing sheet (L X W)

A0 : 1189 x 841

A1: 841 x 594

A2: 594 x 420

A3: 420 x 297

A4: 297 x 210

As per IS 1444: 1989

Drawing Board (L x W)

D0: 1270 x 920

D1: 920 x 650

D2: 650 x 470

D3: 500 x 350

- Drawing Clips / Board Clips

- Drafter

- T-Square

- Pencil, Eraser

- Pencil Grades : HB & 2B

- Drawing Instrument box

- Protractor

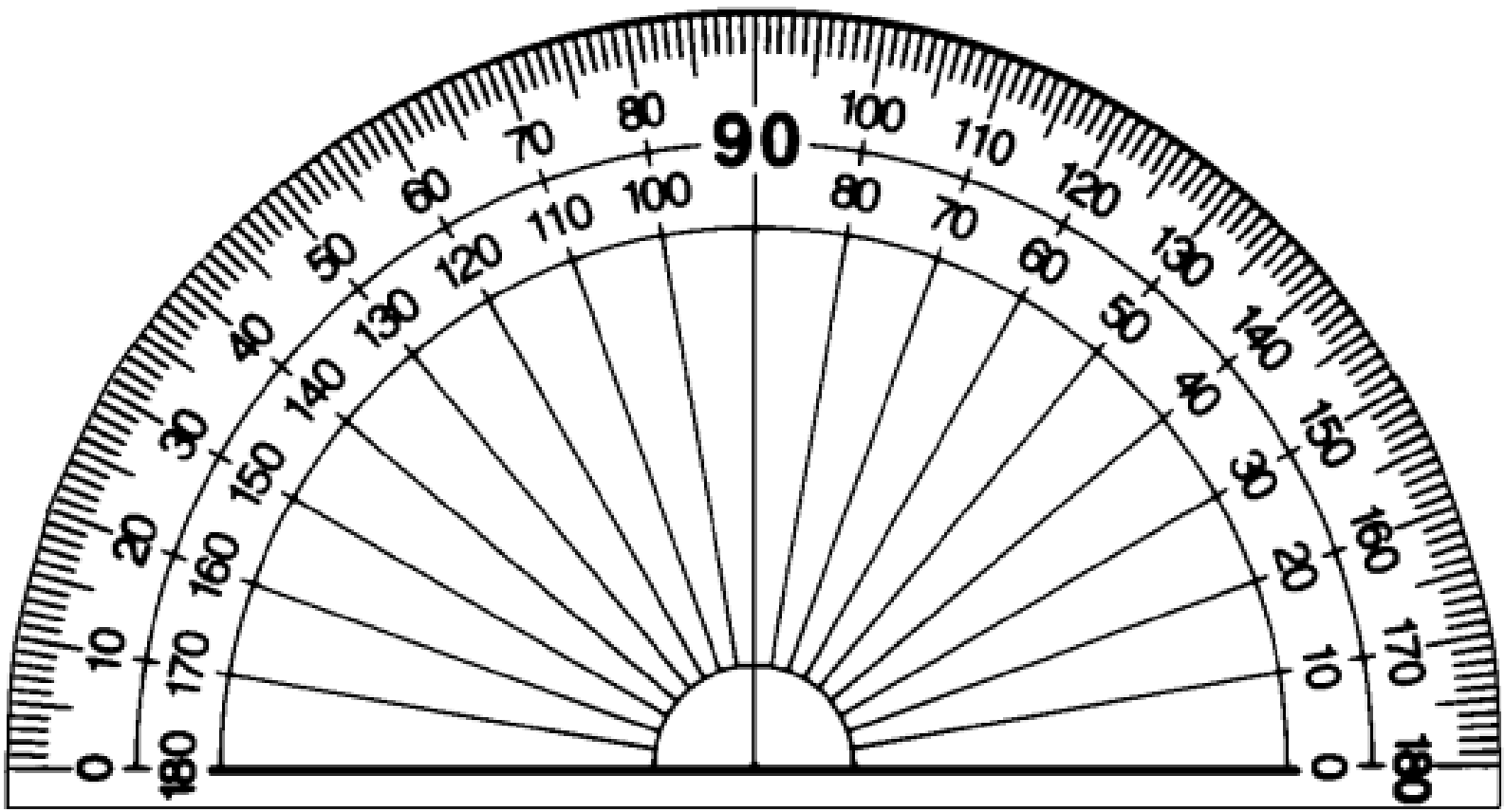

- French Curves

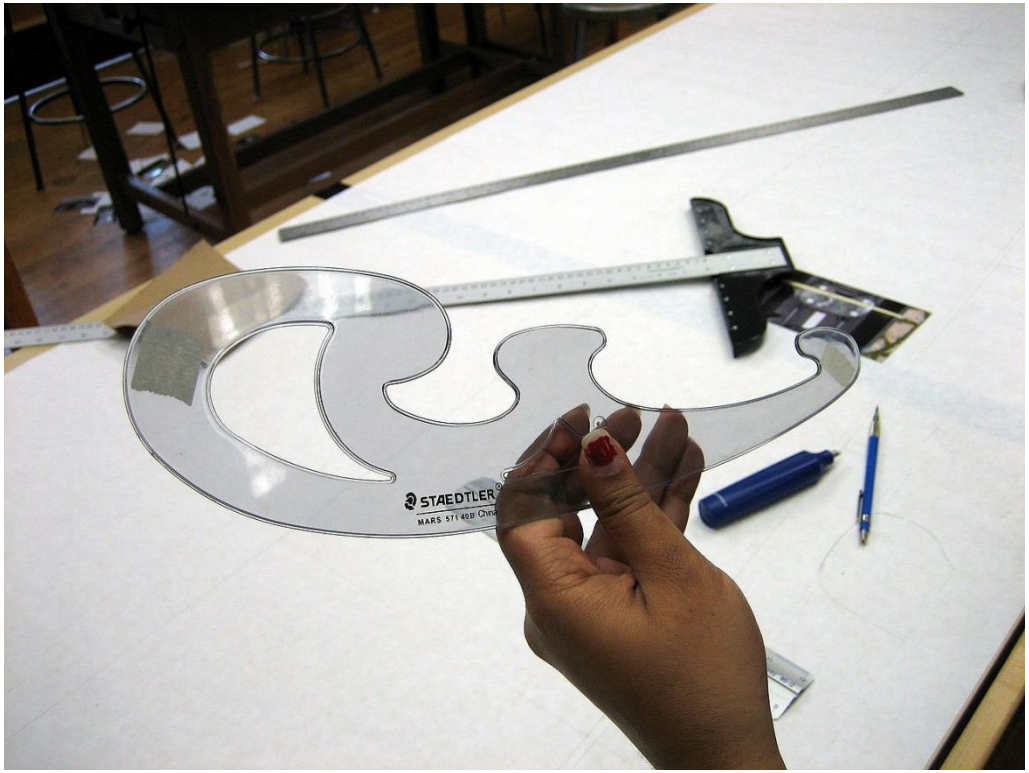

Margins in drawing sheet

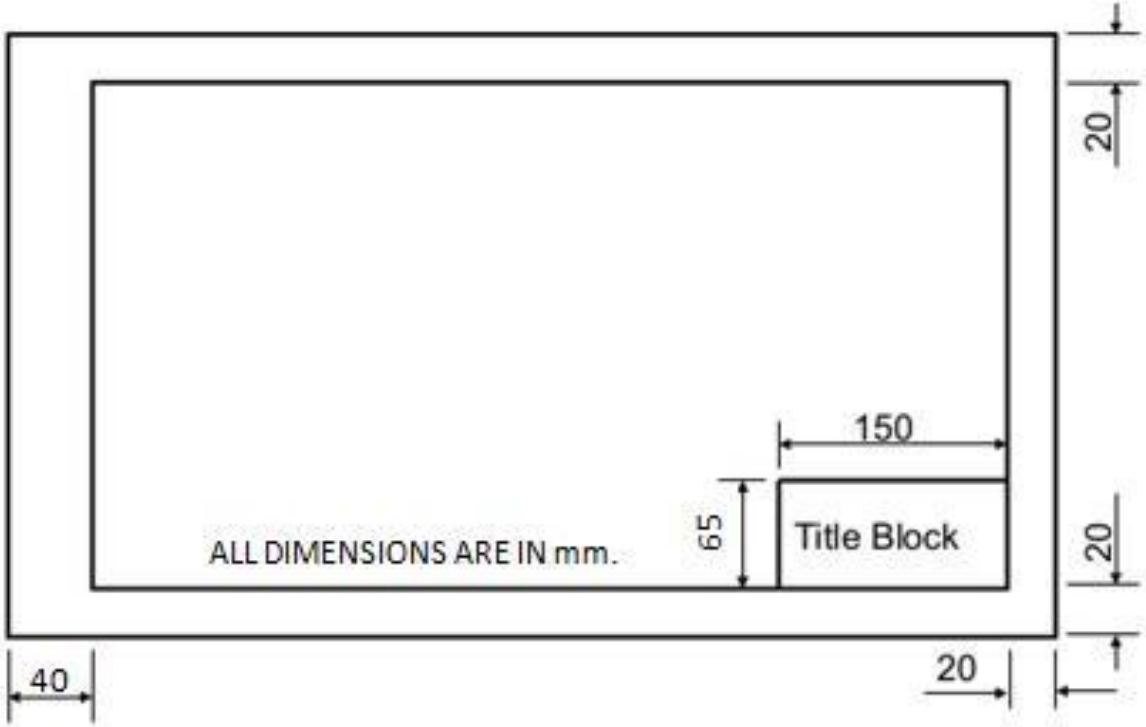

Title Block

Font size

- 12x10mm (150x15mm-IITBBS)
- 8x6mm (150x10mm)

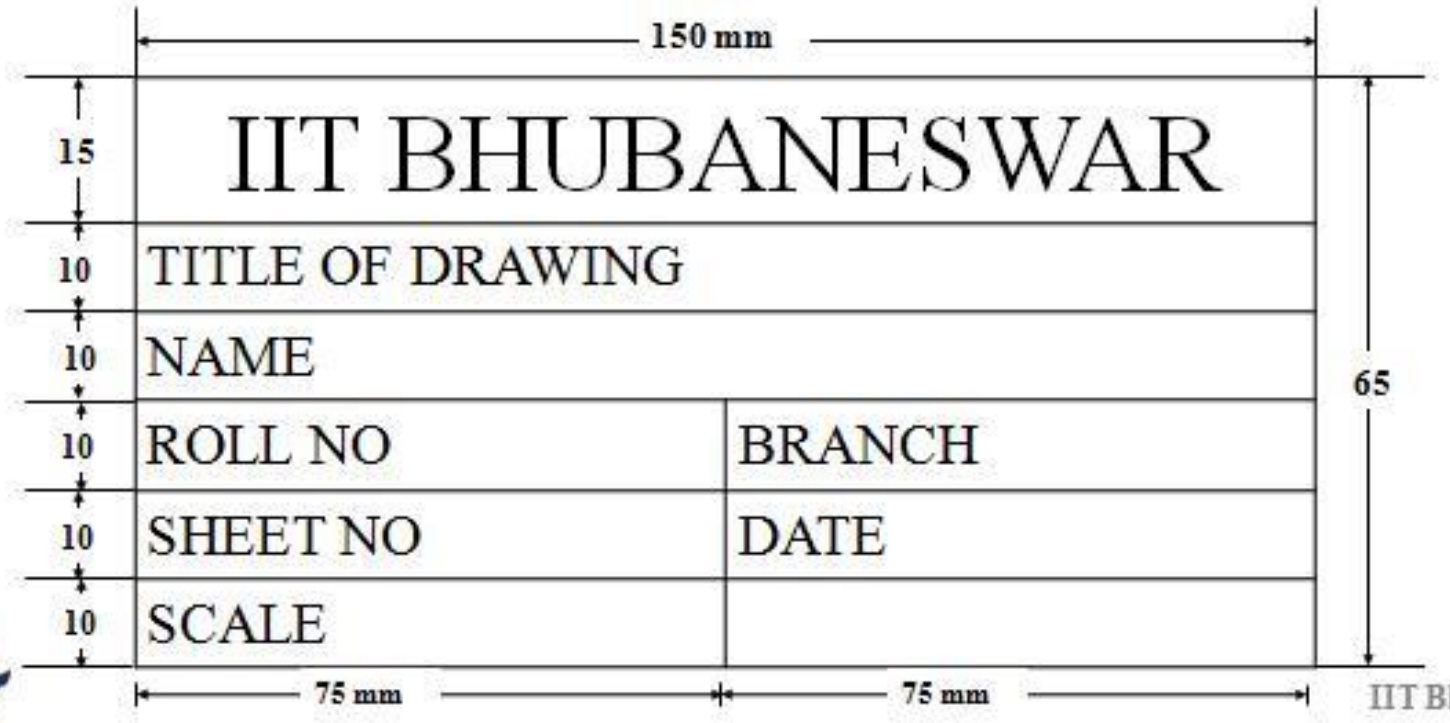

Lines and Lettering

Introduction

- Lines and lettering are two important aspects of technical drawing
- Lines are used to construct a drawing
- Lettering is used to provide some specific information.
- Lines and lettering, together are necessary for meaningful technical drawing.

Lines

- Lines are like the alphabet of a drawing language.
- As the alphabet are used to form meaningful words, various types of lines are used to construct meaningful drawings.
- Lines are drawn using some standard conventions (styles and types)
- The proportions between THIN, MEDIUM and THICK lines are 1 : 2 : 4.

S. No.	Line Type	Representation	Width*	Applications
1	Continuous NARROW		THIN (0.13 mm)	A. Construction lines, B. Projection lines, C. Dimension lines, D. Extension lines, E. Leader lines, F. Section (Hatching) lines, G. Outlines of revolved sections, H. Imaginary lines of intersection
2	Continuous WIDE		MEDIUM (0.25 mm)	A. Visible outline of sectioned surface, B. Reference lines in projection, C. Ground Lines
3	Continuous EXTRA-WIDE		THICK (0.5 mm)	A. Visible outlines, B. Lines of special importance
4	Dashed NARROW		THIN	Hidden lines or edges
5	Dashed WIDE		MEDIUM	Hidden lines or edges
6	Long Dashed Dotted NARROW (Chain NARROW)		THIN	A. Centerlines, B. Lines of symmetry, C. Cutting planes
7	Long Dashed Dotted WIDE (Chain WIDE)		MEDIUM	Cutting planes (at ends & change of direction)
8	Long Dashed Double Dotted NARROW (Phantom NARROW)		THIN	A. Locus lines, B. Alternative and extreme positions of movable parts, C. Outlines of adjacent parts
9	Continuous Freehand NARROW		THIN	Short break line
10	Continuous Zigzag NARROW		THIN	A. Long break line, B. Limits of partial or interrupted views

As per SP 46: 2003 & IS 10713: 1983

Line Groups

Line Group	Line Widths (in mm)		
	THIN	MEDIUM	THICK
0.25	0.13	0.25	0.5
0.35	0.18	0.35	0.7
0.5	0.25	0.5	1
0.7	0.35	0.7	1.4
1	0.5	1	2

- The line group 0.25 is the most preferred group.

Line Strokes

- Line strokes refer to the directions of drawing straight and curved lines.
- Horizontal lines are drawn from left to right
- Vertical and inclined lines are drawn from top to bottom.
- Curved lines are also drawn from left to right or top to bottom.
- Right half (or upper) of a circle is drawn clockwise while left half (or lower) is drawn anticlockwise.

Line Strokes Cont'd

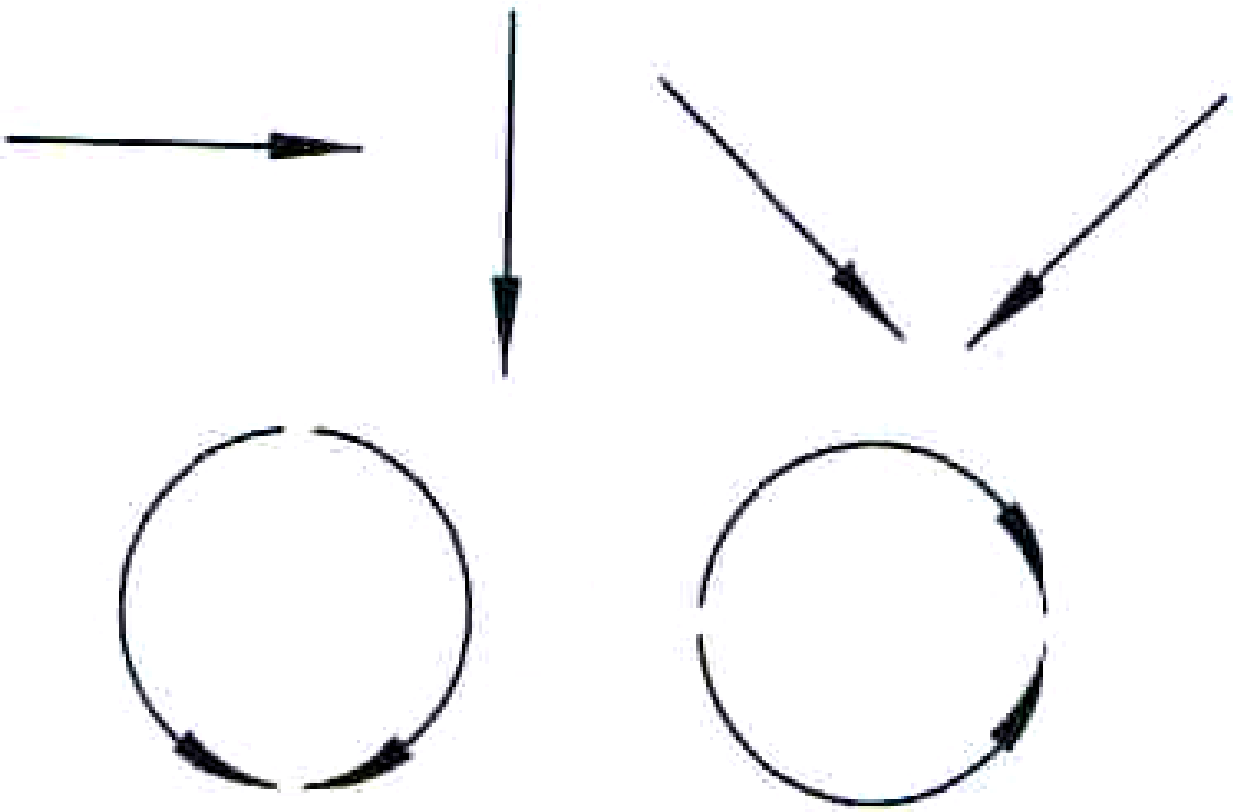

Lettering

- Titles, dimensions, notes
- Single-stroke letter
- Double-stroke letter
- Vertical
- Inclined
- Preferred : Single stroke & Vertical

- As per SP 46: 2003, letters may be 1.8, 2.5, 3.5, 5, 7, 10, 14 & 20 mm
- Main titles: 6mm – 8mm size
- Sub-titles : 3mm – 6mm size
- Notes, dimension : 3mm – 5mm size

Height & Width of Letter

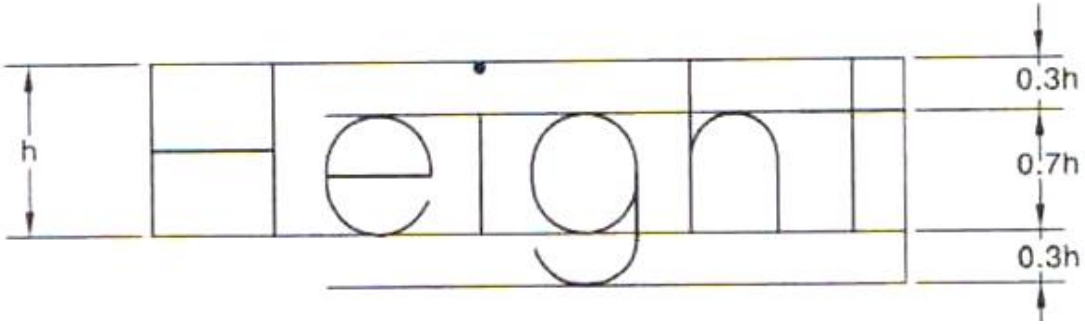

Table 2.3 Width of Letter Groups

		Preferred Height		
	Letter Group	*10 mm*	*7 mm*	*5 mm*
Width	I , 1	5 mm	3 mm	2.5 mm
	B, C, D, E, F, G, H, J, K, L, N, P, R, S, U, Z	7 mm	5 mm	3.5 mm
	A, M, O, Q, T, V, X, Y (TOM-Q-VAXY)	8 mm	6 mm	4 mm
	W	12 mm	8 mm	6 mm
	0, 2, 3, 4, 5, 6, 7, 8, 9	6 mm	4 mm	3 mm
	Line Width	0.7 mm	0.5 mm	0.35 mm

65 mm

IIT BHUBANESWAR	
LINES AND LETTERING	
JOTHI SARAVANAN	
16CE00120 (GR-1)	CIVIL ENGG.
SHEET NO.: 1	06.12.2021
SCALE: 1:1	

150 mm

Dimensioning

- Aligned system
- Unidirectional system

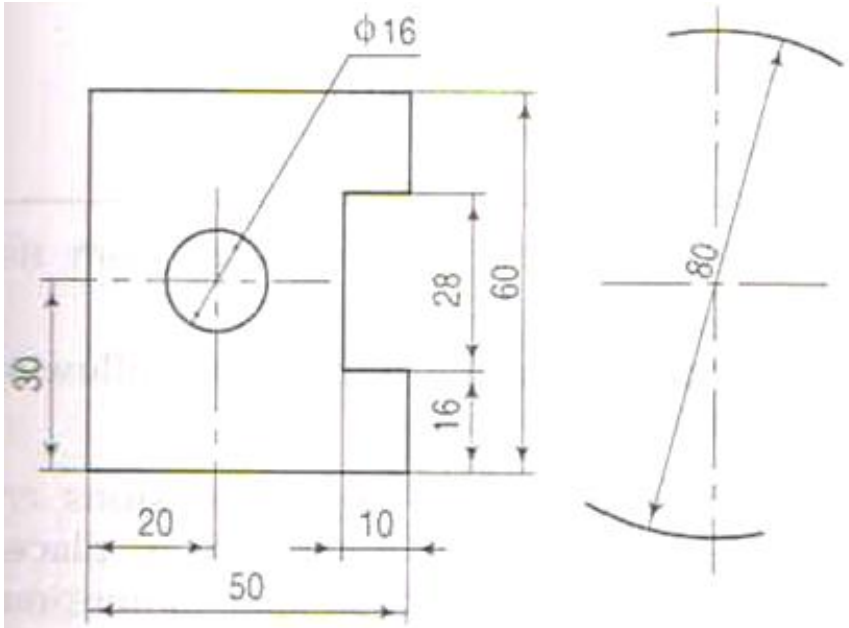

FIG. 3-12

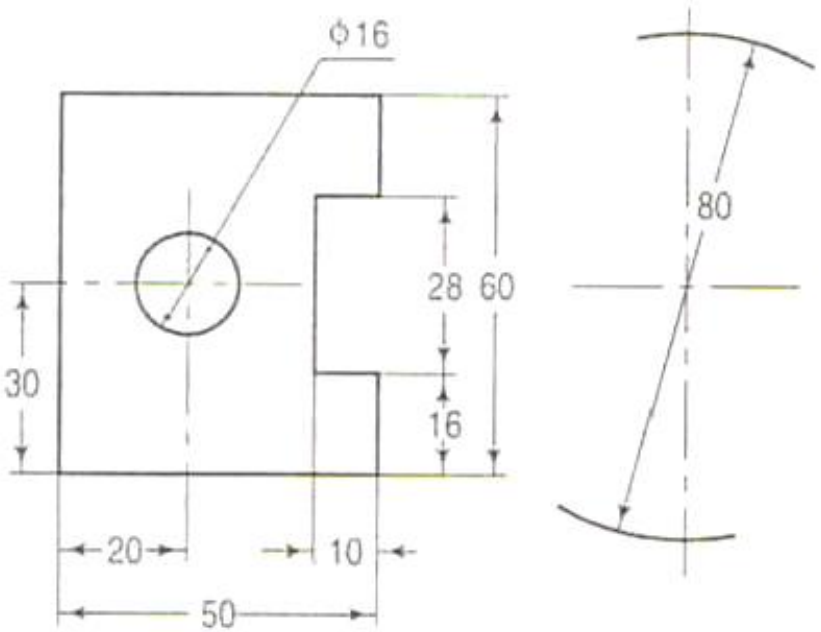

FIG. 3-13

Different lines in dimensioning

- **Outline -** Forms the shape of the object in a view (drawn dark and continuous)
- **Extension line –** An extension of an outline or centerline (drawn light and continuous, used to indicate the entity being dimensioned)
- **Dimension line –** Thin continuous line terminated by arrowheads touching the outlines, extension lines or center lines (used to specify end points of a dimension)

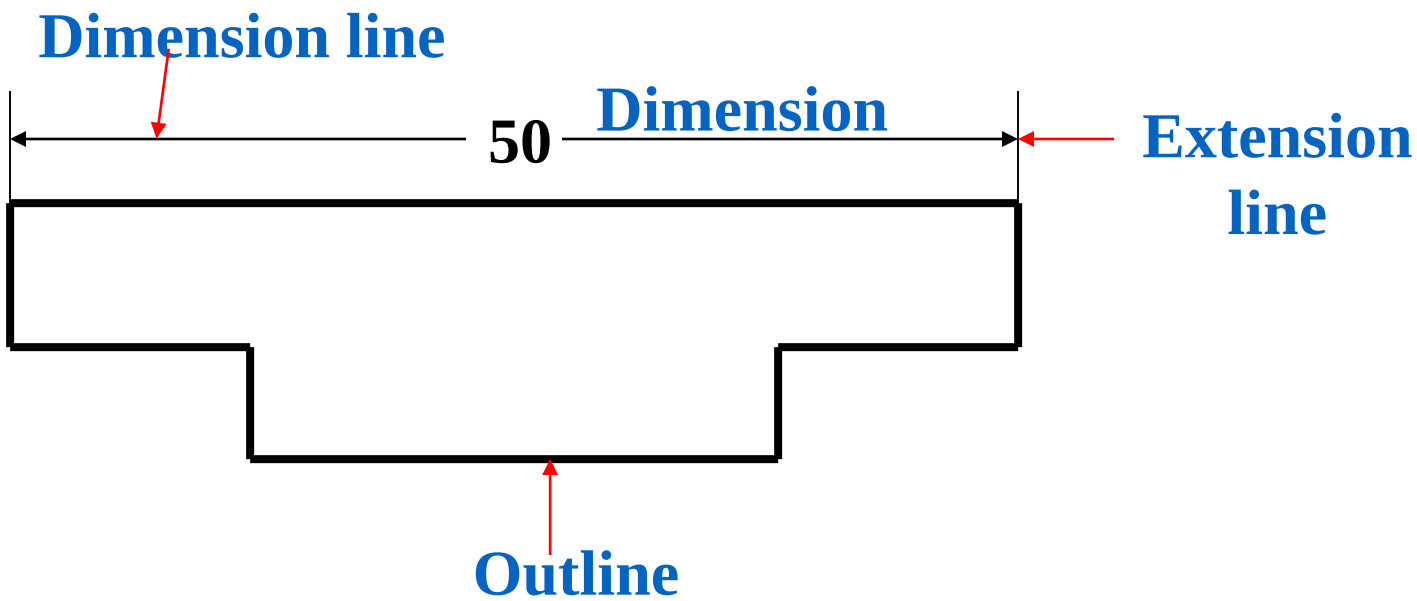

	CORRECT	INCORRECT	REASONS FOR INCORRECT
(i)	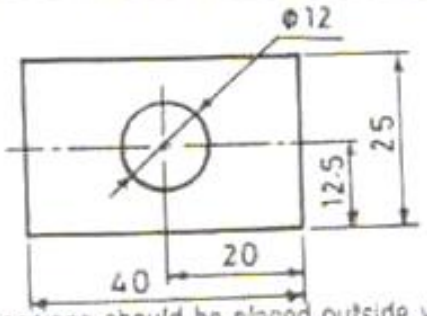 Dimensions should be placed outside view	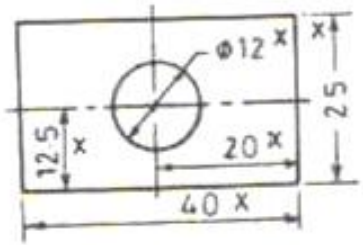	1. Arrow head not proportionate 2. Hole dimension shown in figure. Leader line not ends horizontally. 3. Dimension '40' is too close. 4. Placing dimensions methods mix. Dimension '40' is according to aligned method.
(ii)	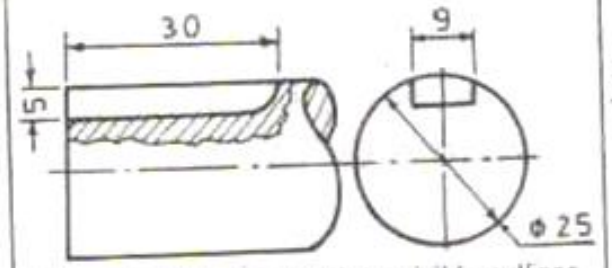 Dim. should be marked from visible outlines	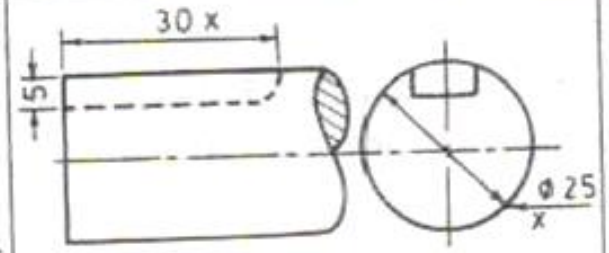	1. A key-way is shown with dotted line where the dimensions are placed. 2. Leader line for the shaft diameter is drawn horizontal touching the boundary line.
(iii)	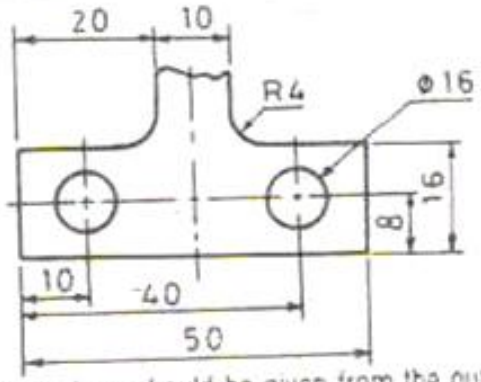 Dimensions should be given from the outlines (finished surfaces) or a centre line of a hole	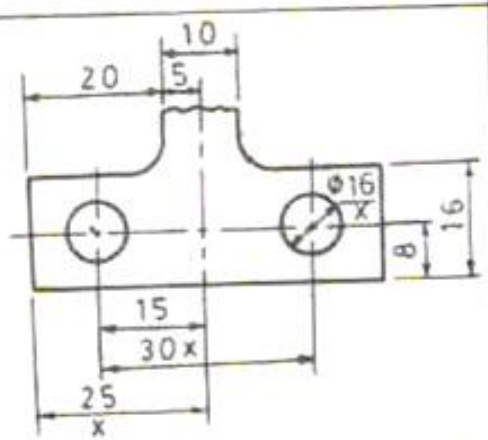	1. Dimensions are given from the mid-line of the object. 2. Dimensions of holes are shown inside the figure. 3. Dimensions are shown in vertical line. 4. Smaller dimencions (25 mm) precedes the larger dimensions (30 mm). 5. Fillet radius is not shown.
	15 20	15	1. Dimension lines are used as extension

	Dimensions should be given from the [illegible] (finished surfaces) or a centre line of a hole		
(iv)	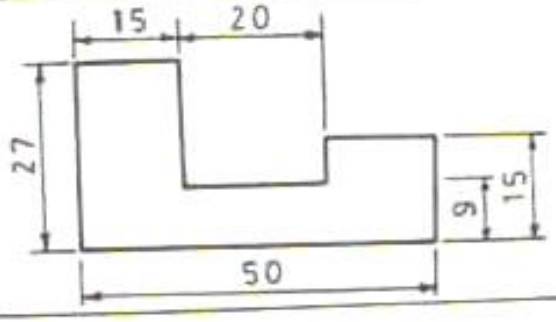	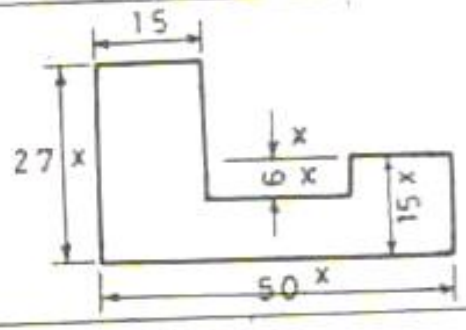	1. Dimension lines are used as extension. 2. Dimensions are placed inside the view. 3. Dimension 27 and 50 not written according to aligned system.
(v)			Section-lines overlap the dimension 21.
(vi)	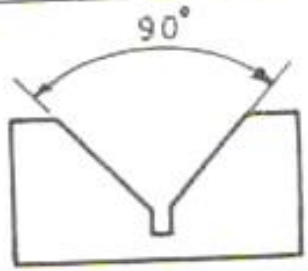	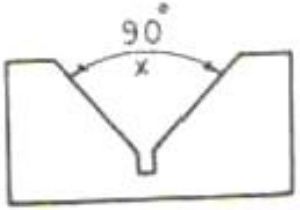	The outlines of the object are used as the extension lines.
(vii)	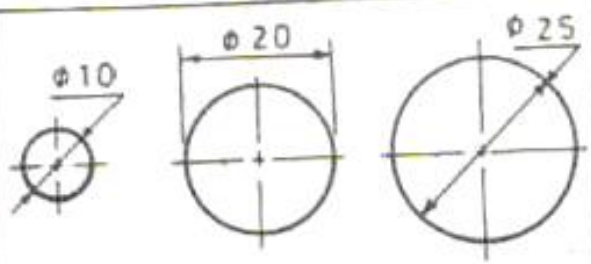	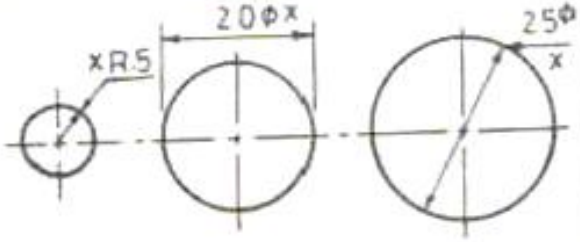	1. Smaller circle is designated with radius. 2. Convention 'ϕ' for diameter is placed after dimension. 3. Leader has arrow and it is drawn horizontal.

FIG. 3-29